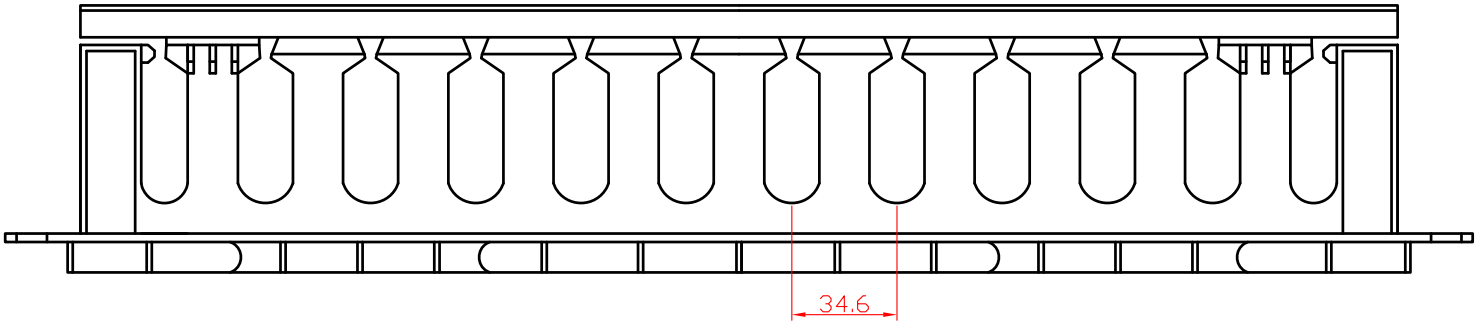

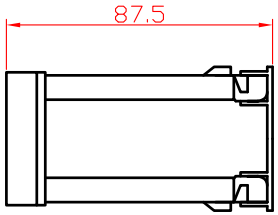

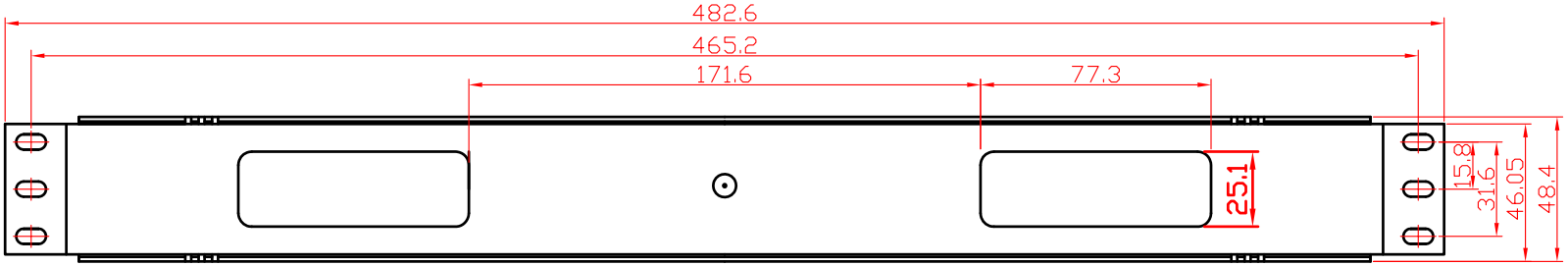

Note:
1. Without rag, deformation, scratch, soiled flaws.
2. The size is the finished size.
3. Weight:

SYM	Number	Bill No. of Alteration	Signature	Date

Drawn	Hang kang ming	2018.11.22	Tolerance
			0.00-20.00 ±0.10 20.00-50.00 ±0.15 50.00-100.00 ±0.20 100.00- ±0.25 Angle ±30'
Approved			

Material	plastic			Item No.	595078
Angles Projection	Size	Scale	Unit	Part Name	1U cable management bar
	A4	X:1	mm		
Sheet	1 OF 1	Version: A/0		ERP Part No.	